UMTS&LTE EVB

User Guide

UMTS/HSPA/LTE Module Series

Rev. UMTS&LTE_EVB_User_Guide_V2.1

Date: 2017-12-27

Status: Released

Our aim is to provide customers with timely and comprehensive service. For any assistance, please contact our company headquarters:

Quectel Wireless Solutions Co., Ltd.
7th Floor, Hongye Building, No.1801 Hongmei Road, Xuhui District, Shanghai 200233, China
Tel: +86 21 5108 6236
Email: info@quectel.com

Or our local office. For more information, please visit:
http://quectel.com/support/sales.htm

For technical support, or to report documentation errors, please visit:
http://quectel.com/support/technical.htm
Or email to: support@quectel.com

GENERAL NOTES

QUECTEL OFFERS THE INFORMATION AS A SERVICE TO ITS CUSTOMERS. THE INFORMATION PROVIDED IS BASED UPON CUSTOMERS' REQUIREMENTS. QUECTEL MAKES EVERY EFFORT TO ENSURE THE QUALITY OF THE INFORMATION IT MAKES AVAILABLE. QUECTEL DOES NOT MAKE ANY WARRANTY AS TO THE INFORMATION CONTAINED HEREIN, AND DOES NOT ACCEPT ANY LIABILITY FOR ANY INJURY, LOSS OR DAMAGE OF ANY KIND INCURRED BY USE OF OR RELIANCE UPON THE INFORMATION. ALL INFORMATION SUPPLIED HEREIN IS SUBJECT TO CHANGE WITHOUT PRIOR NOTICE.

COPYRIGHT

THE INFORMATION CONTAINED HERE IS PROPRIETARY TECHNICAL INFORMATION OF QUECTEL WIRELESS SOLUTIONS CO., LTD. TRANSMITTING, REPRODUCTION, DISSEMINATION AND EDITING OF THIS DOCUMENT AS WELL AS UTILIZATION OF THE CONTENT ARE FORBIDDEN WITHOUT PERMISSION. OFFENDERS WILL BE HELD LIABLE FOR PAYMENT OF DAMAGES. ALL RIGHTS ARE RESERVED IN THE EVENT OF A PATENT GRANT OR REGISTRATION OF A UTILITY MODEL OR DESIGN.

Copyright © Quectel Wireless Solutions Co., Ltd. 2017. All rights reserved.

About the Document

History

Revision	Date	Author	Description
1.0	2015-03-03	Huik LI	Initial
1.1	2015-06-10	Radom XIANG	Deleted +5V adapter parts in EVB accessories
2.0	2017-01-12	Allen WANG	1. Added applicable modules of the EVB: EC25, EC21, EC20 R2.0, FC20 series and EG95 2. Added the description of UMTS&LTE TE-A interface (Chapter 4.2) 3. Added the description of Wi-Fi & Ethernet TE-A interface (Chapter 4.3) 4. Added the description of digital audio codec board interface (Chapter 4.5.1) 5. Added the description of SD card interface (Chapter 4.7) 6. Added a Wi-Fi antenna and two codec boards into EVB accessories 7. Added procedures for power on/off Wi-Fi modules in Chapter 5
2.1	2017-12-27	Eden LIU/ Lyndon LIU	Added the following applicable modules of the EVB: AG35, AF20, BG96, EG91 and EC20 R2.1.

Contents

About the Document **2**
Contents **3**
Table Index **5**
Figure Index **6**

1 Introduction **7**
1.1. Safety Information 7

2 General Overview **9**
2.1. Applicable Modules 9
2.2. Key Features 10
2.3. Interface Overview 11
2.4. Top View of EVB 13
2.5. EVB Kit Accessories 14

3 EVB Kit Accessories Assembly **16**

4 Interface Applications **17**
4.1. Power Interface (J201/J801) 17
4.2. UMTS&LTE TE-A Interface 18
4.3. Wi-Fi & Ethernet TE-A Interface 19
4.4. USB Interface (J801) 21
4.5. Audio Interfaces 22
4.5.1. Digital Audio Codec Board Interface (J501) 22
4.5.2. Analog Audio Interfaces (J603/J601/J602) 23
4.5.2.1. Loudspeaker Interface (J603) 23
4.5.2.2. Earphone Interface (J601) 24
4.5.2.3. Handset Interface (J602) 25
4.6. (U)SIM Interface (J702) 27
4.7. SD Card Interface (J701) 29
4.8. UART Interfaces (J401/J402) 30
4.9. Switches and Buttons 32
4.10. Status Indication LEDs 33
4.11. Test Points 34

5 Operation Procedures Illustration **38**
5.1. Power on UMTS&LTE and Wi-Fi Modules 38
5.2. Communication Via USB or UART Interface 39
5.2.1. Communication via USB Interface 39
5.2.2. Communication via UART Interface 40
5.3. Firmware Upgrade 41
5.4. Reset UMTS&LTE Modules 41
5.5. Power off UMTS&LTE and Wi-Fi Modules 42

6 Appendix A References.....43

Table Index

TABLE 1: KEY FEATURES 10
TABLE 2: INTERFACES OF UMTS&LTE EVB 11
TABLE 3: ACCESSORIES LIST 14
TABLE 4: PIN DEFINITION OF J801 21
TABLE 5: PIN DEFINITION OF J601 25
TABLE 6: PIN DEFINITION OF J602 27
TABLE 7: PIN DEFINITION OF J702 28
TABLE 8: PIN DEFINITION OF J401 31
TABLE 9: PIN DEFINITION OF J402 31
TABLE 10: DESCRIPTION OF SWITCHES AND BUTTONS 32
TABLE 11: DESCRIPTION OF STATUS INDICATION LEDS 33
TABLE 12: PIN DEFINITION OF J803, J804, J805 AND J806 35
TABLE 13: INDICATION OF D206 AND D208 39
TABLE 14: RELATED DOCUMENTS 43
TABLE 15: TERMS AND ABBREVIATIONS 43

Figure Index

FIGURE 1: UMTS&LTE EVB INTERFACE OVERVIEW (UNIT: MM) 11
FIGURE 2: UMTS&LTE EVB TOP VIEW 13
FIGURE 3: EVB KIT ACCESSORIES 14
FIGURE 4: UMTS&LTE EVB KIT ASSEMBLY 16
FIGURE 5: POWER SUPPLY FOR UMTS&LTE EVB 17
FIGURE 6: POWER INTERFACES 18
FIGURE 7: POWER PLUG DESIGN 18
FIGURE 8: CONNECTION BETWEEN UMTS&LTE TE-A AND EVB 19
FIGURE 9: SIMPLIFIED FC20-TE-A/AF20-TE-A INTERFACE SCHEMATIC 20
FIGURE 10: CONNECTION BETWEEN FC20-TE-A AND EVB 20
FIGURE 11: REFERENCE CIRCUIT DESIGN FOR USB DEVICE INTERFACE 21
FIGURE 12: REFERENCE DESIGN FOR CONNECTION BETWEEN CODEC BOARD AND EVB 22
FIGURE 13: CONNECTION BETWEEN CODEC BOARD AND EVB 23
FIGURE 14: REFERENCE CIRCUIT DESIGN FOR LOUDSPEAKER INTERFACE J603 23
FIGURE 15: REFERENCE CIRCUIT DESIGN FOR EARPHONE INTERFACE J601 24
FIGURE 16: PIN ASSIGNMENT OF J601 24
FIGURE 17: SKETCH OF AUDIO PLUG 25
FIGURE 18: REFERENCE CIRCUIT DESIGN FOR HANDSET INTERFACE J602 26
FIGURE 19: PIN ASSIGNMENT OF J602 26
FIGURE 20: SIMPLIFIED INTERFACE SCHEMATIC FOR (U)SIM CARD CONNECTOR J702 27
FIGURE 21: PIN ASSIGNMENT OF J702 28
FIGURE 22: SIMPLIFIED INTERFACE SCHEMATIC FOR SD CARD INTERFACE J701 29
FIGURE 23: PIN ASSIGNMENTS OF J701 29
FIGURE 24: UART BLOCK DIAGRAM 30
FIGURE 25: PIN ASSIGNMENT OF J401 30
FIGURE 26: PIN ASSIGNMENT OF J402 31
FIGURE 27: S901 SWITCH 32
FIGURE 28: S201 SWITCH AND S301/S302/S303 BUTTONS 32
FIGURE 29: STATUS INDICATION LEDS 33
FIGURE 30: TEST POINTS J803, J805 AND J806 34
FIGURE 31: TEST POINT J804 35
FIGURE 32: USB PORTS 39
FIGURE 33: COM PORT SETTING FIELD ON QCOM (USB AT PORT CONNECTION) 40
FIGURE 34: USB SERIAL PORT 40
FIGURE 35: COM PORT SETTING FIELD ON QCOM (USB SERIAL PORT CONNECTION) 40
FIGURE 36: CONFIGURATIONS FOR FIRMWARE UPGRADE 41

1 Introduction

This document describes how to use the evaluation board of UMTS&LTE modules and Wi-Fi modules. It is an assistant tool for engineers to develop and test Quectel UMTS, LTE and Wi-Fi modules.

1.1. Safety Information

The following safety precautions must be observed during all phases of the operation, such as usage, service or repair of any cellular terminal or mobile incorporating UMTS&LTE and Wi-Fi modules. Manufacturers of the cellular terminal should send the following safety information to users and operating personnel, and incorporate these guidelines into all manuals supplied with the product. If not so, Quectel assumes no liability for the customer's failure to comply with these precautions.

	Full attention must be given to driving at all times in order to reduce the risk of an accident. Using a mobile while driving (even with a handsfree kit) causes distraction and can lead to an accident. You must comply with laws and regulations restricting the use of wireless devices while driving.
	Switch off the cellular terminal or mobile before boarding an aircraft. Make sure it is switched off. The operation of wireless appliances in an aircraft is forbidden, so as to prevent interference with communication systems. Consult the airline staff about the use of wireless devices on boarding the aircraft, if your device offers an Airplane Mode which must be enabled prior to boarding an aircraft.
	Switch off your wireless device when in hospitals, clinics or other health care facilities. These requests are designed to prevent possible interference with sensitive medical equipment.
	Cellular terminals or mobiles operating over radio frequency signal and cellular network cannot be guaranteed to connect in all conditions, for example no mobile fee or with an invalid USIM/SIM card. While you are in this condition and need emergent help, please remember using emergency call. In order to make or receive a call, the cellular terminal or mobile must be switched on and in a service area with adequate cellular signal strength.

	Your cellular terminal or mobile contains a transmitter and receiver. When it is ON, it receives and transmits radio frequency energy. RF interference can occur if it is used close to TV set, radio, computer or other electric equipment.
	In locations with potentially explosive atmospheres, obey all posted signs to turn off wireless devices such as your phone or other cellular terminals. Areas with potentially explosive atmospheres include fuelling areas, below decks on boats, fuel or chemical transfer or storage facilities, areas where the air contains chemicals or particles such as grain, dust or metal powders, etc.

2 General Overview

Quectel supplies UMTS&LTE EVB for designers to develop applications based on Quectel UMTS&LTE modules and Wi-Fi modules. This EVB can test basic functionalities of these modules.

2.1. Applicable Modules

UMTS&LTE EVB is applicable to the following module models.

UMTS&LTE modules

- UC20
- UGxx [1)]
- EC2x [2)]
- EG9x [3)]
- AG35
- BG96

Wi-Fi Modules

- FC20 series [4)]
- AF20

NOTES

1. [1)] UGxx contains UG95 and UG96.
2. [2)] EC2x contains EC25, EC21, EC20, EC20 R2.0 and EC20 R2.1.
3. [3)] EG9x contains EG91 and EG95.
4. [4)] FC20 series (hereinafter FC20 simply) includes both FC20 and FC20-N.

2.2. Key Features

The following table describes the detailed features of UMTS&LTE EVB.

Table 1: Key Features

Features	Implementation
Power Supply	DC supply: 4.5~5.5V, typical 5V VBAT: 3.8V for J103
UMTS&LTE TE-A Interface	Support UMTS&LTE modules: UC20/UGxx/EC2x/EG9x/AG35/BG96
Wi-Fi & Ethernet TE-A Interface	Support Wi-Fi modules: FC20/AF20
SD Interface	Support SD card
(U)SIM Interface	Support (U)SIM card insertion detection Support (U)SIM card: 3.0V and 1.8V
Audio Interfaces	● One digital audio codec board interface Support Realteck ALC5616 and TI TLV320AIC3104 codec boards ● Three analog interfaces used for loudspeaker, earphone and handset
UART Interfaces	Two UART interfaces: ● COM1: serial interface for data communication Max baud rate: 460800bps; ● COM2: serial interface for debug purpose Default baud rate: 115200bps
USB Interface	USB 2.0
Signal Indication	5 LEDs are available for signal indication
Button and Switches	Power Switch (S201), PWRKEY (S302), RESET (S303), PWRDWN_N (S301), BT Function Switch (S901)
Physical Characteristics	Size: 146.4mm × 115.0mm

2.3. Interface Overview

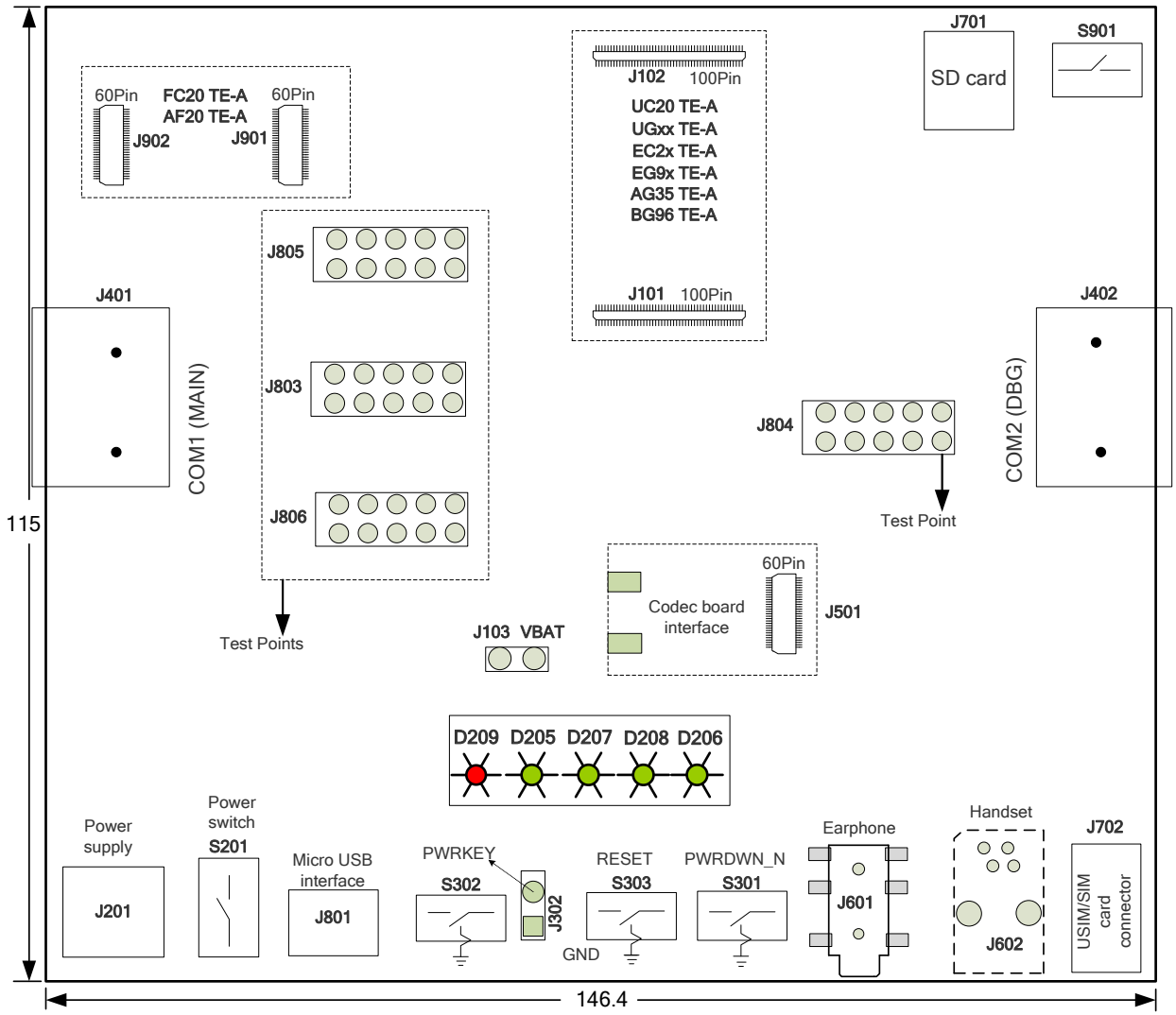

Figure 1: UMTS&LTE EVB Interface Overview (Unit: mm)

Table 2: Interfaces of UMTS&LTE EVB

Interface	Reference No.	Description
Power Supply [1)]	J201 (bottom side)	The power jack on the EVB Typical supply voltage: +5V
	J801	Micro-USB interface Typical supply voltage: +5V
Power Switch	S201	VBAT ON/OFF control

PWRKEY	S302	Power key (push button) Used to turn on/off UC20/EC2x/EG9x/AG35/BG96 modules, or turn on UGxx modules only
	J302	Jumper wire Used to connect PWRKEY to GND
PWRDWN_N	S301	Used to turn off UGxx modules only
RESET	S303	Reset button (push button) Used to reset UMTS&LTE modules
BT Function Switch	S901	Switched to the left: connect BT interface (UART, PCM) of Wi-Fi modules to the PCM interface of EC2x/AG35 modules, for testing the BT function of Wi-Fi modules. Switched to the right: connect the main UART and codec board interfaces on EVB to UMTS&LTE modules, for testing the modules' main UART functions, and the codec's PCM function.
Micro USB	J801	USB device interface
Audio	J501	Codec board interface
	J603	Used for loudspeaker Used to test the analog audio function of UMTS&LTE modules
	J601	Used for earphone Used to test the analog audio function of UMTS&LTE modules
	J602 (bottom side)	Used for handset Used to test the analog audio function of UMTS&LTE modules
(U)SIM	J702	(U)SIM card connector
COM1	J401 (bottom side)	Main UART port
COM2	J402 (bottom side)	Debug UART port
Status Indication LEDs	D209, D205, D207, D208, D206	D209 (VBAT ON/OFF indicator) is used to indicate whether the power supply for UMTS&LTE modules is ready. D205 (power ON/OFF indicator) is used to indicate whether UMTS&LTE modules are powered on. D207 (sleep status indicator) is used to indicate whether UMTS&LTE modules are in sleep mode. D208 and D206 (network status indicator) are used to indicate the network status of UMTS&LTE modules.
TE-A Interfaces	J101, J102	Connectors of UMTS&LTE TE-A
	J901, J902	Connectors of Wi-Fi & Ethernet TE-A
SD Card	J701	SD card connector

VBAT	J103	Jumper wire Used for VBAT voltage test
Test Points	J803, J804, J805, J806	Test pins

NOTE

1) The power supply information in above table is for UMTS&LTE modules. For the detailed information of power supply for Wi-Fi modules, please refer to ***Chapter 4.1*** and ***Chapter 4.3***.

2.4. Top View of EVB

The top view of the UMTS&LTE EVB is shown as following figure.

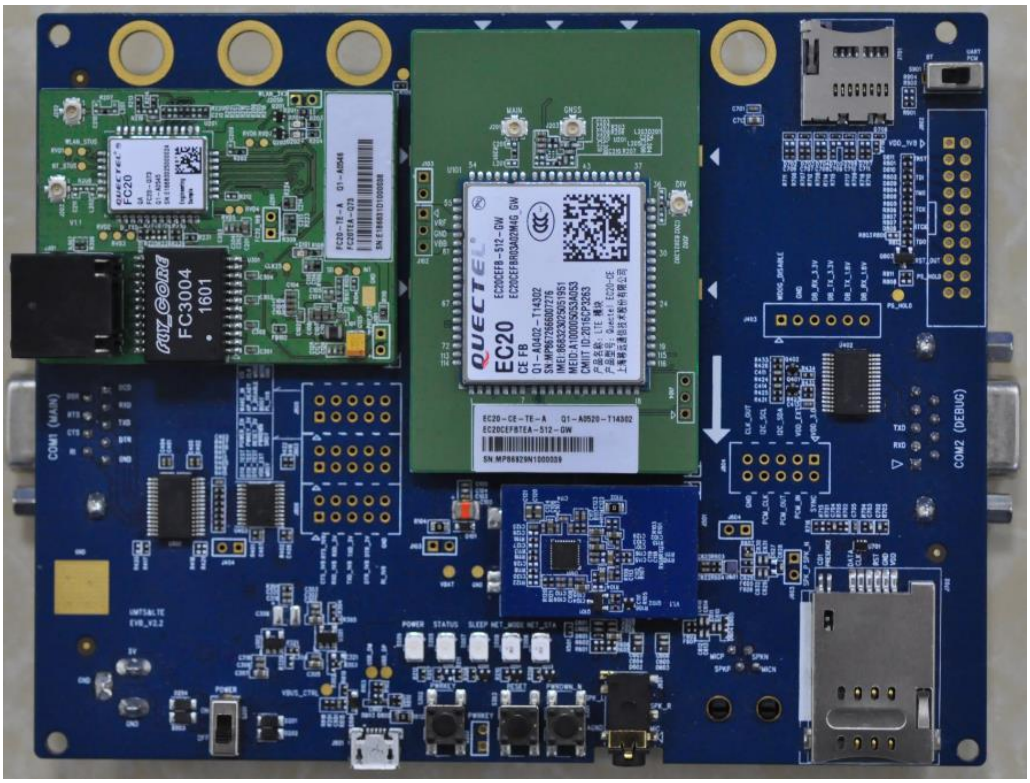

Figure 2: UMTS&LTE EVB Top View

2.5. EVB Kit Accessories

All accessories of the UMTS&LTE EVB kit are listed as below.

Figure 3: EVB Kit Accessories

Table 3: Accessories List

Items	Description	Quantity
Cables	USB to UART converter cable	1
	USB cable	1
	RF cable	4
Antennas	Main antenna	2

	GNSS antenna (passive)	1
	Wi-Fi antenna	1
Audio	Earphone	1
Disk	USB 2.0 to RS232 driver and USB driver disk	1
Codec Boards	ALC5616 and TLV320AIC3104	2
Others	Bolts and coupling nuts for assembling EVB	4 for each type
Instruction Sheet	A sheet of paper giving instructions for EVB connection, details of EVB accessories, etc.	1

NOTE

The main antenna can also be used for diversity reception.

3 EVB Kit Accessories Assembly

The following figure shows the EVB Kit accessories assembly.

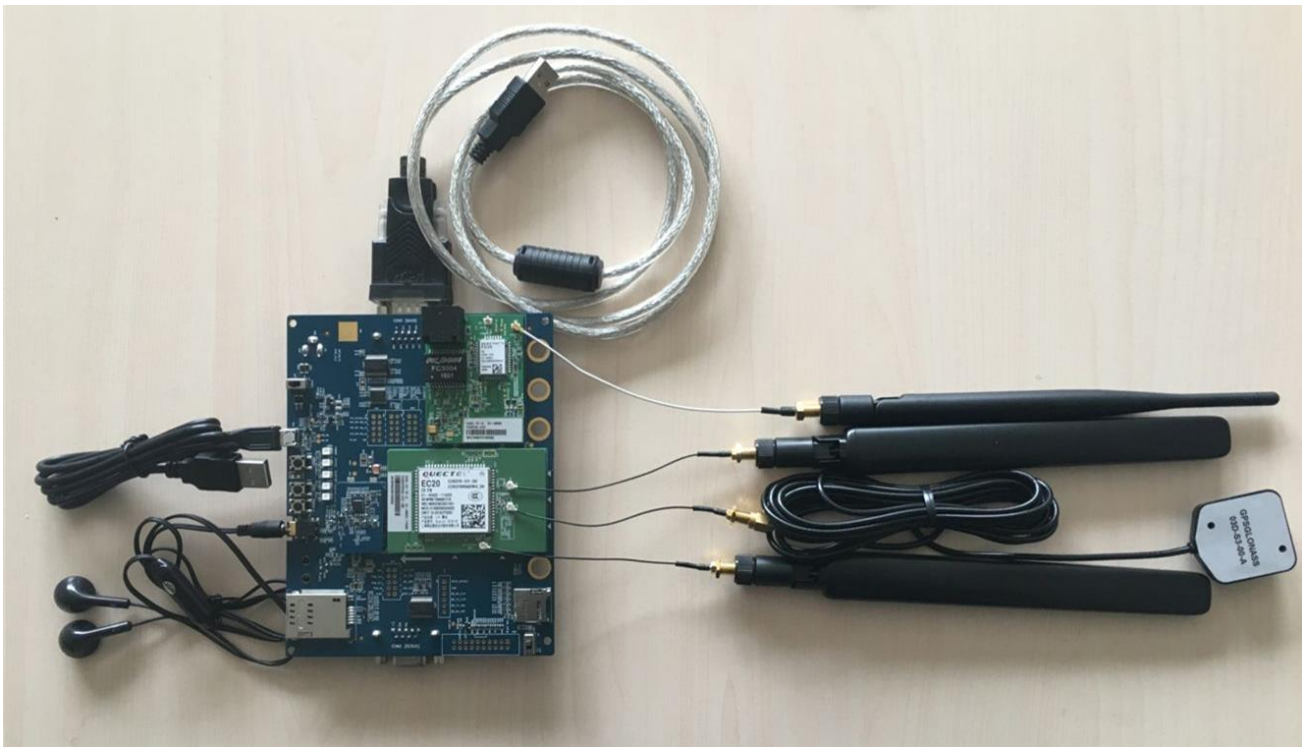

Figure 4: UMTS&LTE EVB Kit Assembly

4 Interface Applications

This chapter describes the hardware interfaces of UMTS&LTE EVB, shown as follows:

- Power interface
- UMTS&LTE TE-A interface
- Wi-Fi & Ethernet TE-A interface
- USB interface
- Audio interfaces
- (U)SIM interface
- SD card interface
- UART interfaces

It also provides information about the buttons, switch, status indication LEDs and test points to help customers use the UMTS&LTE EVB.

4.1. Power Interface (J201/J801)

The UMTS&LTE EVB can be powered by an external power adapter through connecting with the power jack (J201) or USB receptacle (J801) on the EVB. The power adapter connects to a step-down converter which can provide the supply voltage (VBAT) required for operating the EVB and the module.

The following two figures show the simplified power supply schematic and the power interface of Quectel UMTS&LTE EVB.

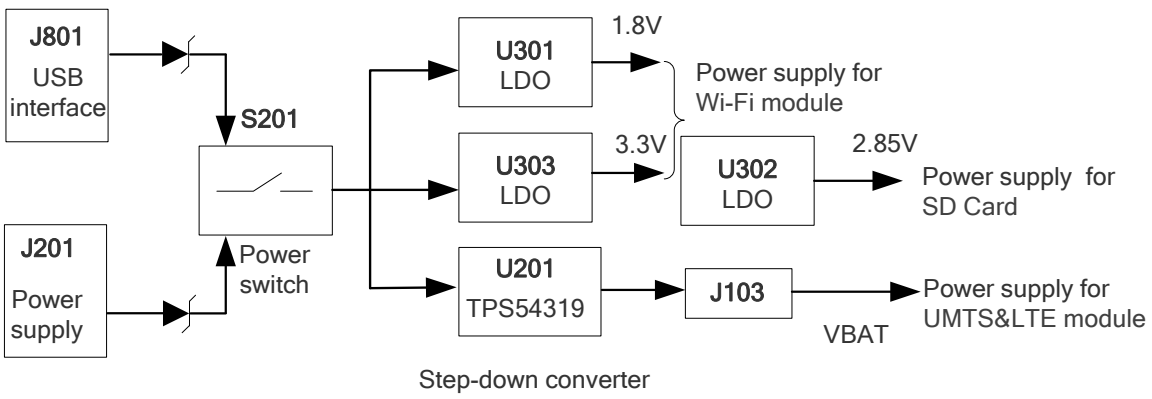

Figure 5: Power Supply for UMTS&LTE EVB

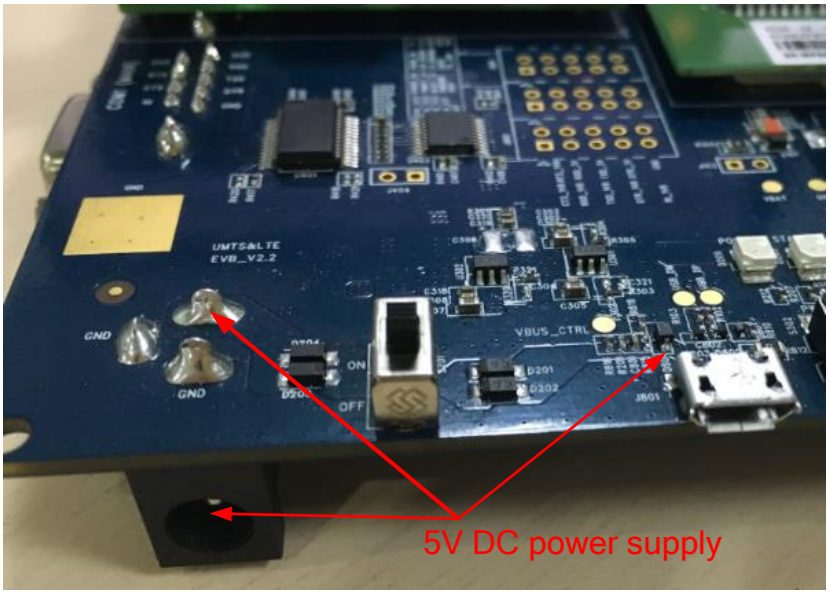

Figure 6: Power Interfaces

Before connecting the power supply, customers have to select a proper DC power adapter to supply power for the UMTS&LTE EVB, and the power plug design of the adapter is shown as below.

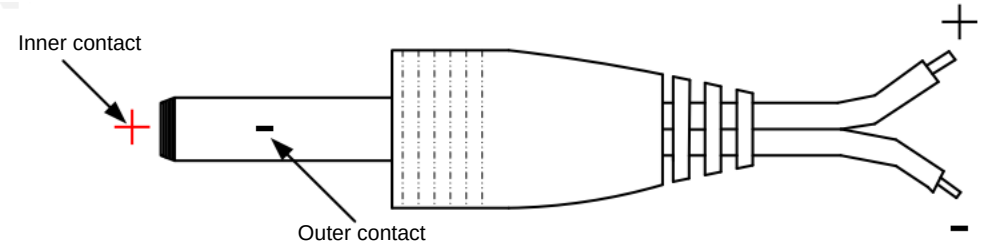

Figure 7: Power Plug Design

4.2. UMTS&LTE TE-A Interface

The UMTS&LTE TE-A interface is designed to accommodate the TE-A of UMTS&LTE (UC20/UGxx/EC2x/EG9x/AG35/BG96) modules. The TE-A is connected to the EVB via BTB connectors J101 and J102. The interface allows customers to easily test the functionalities of UMTS&LTE modules or to develop applications based on them.

The following figure shows the connection between UMTS&LTE TE-A and EVB.

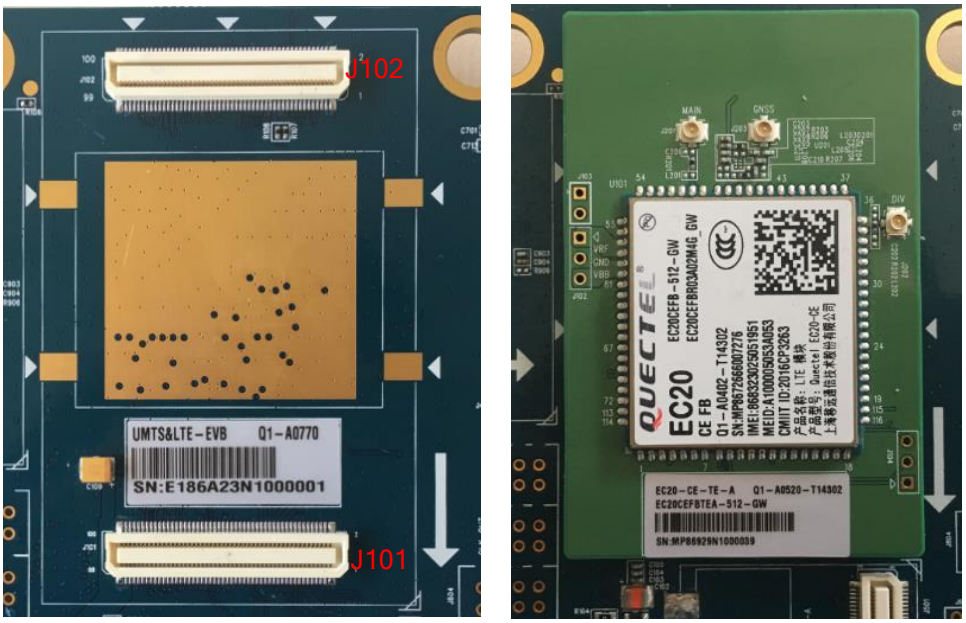

Figure 8: Connection between UMTS&LTE TE-A and EVB

4.3. Wi-Fi & Ethernet TE-A Interface

The Wi-Fi & Ethernet TE-A interface is designed to accommodate the TE-A of Wi-Fi (FC20/AF20) modules. The TE-A is connected to the EVB via BTB connectors J901 and J902. The interface allows customers to easily test the Wi-Fi function of EC2x/AG35 modules or to develop applications with Wi-Fi function.

The following two figures show the connection between FC20-TE-A /AF20-TE-A and EVB.

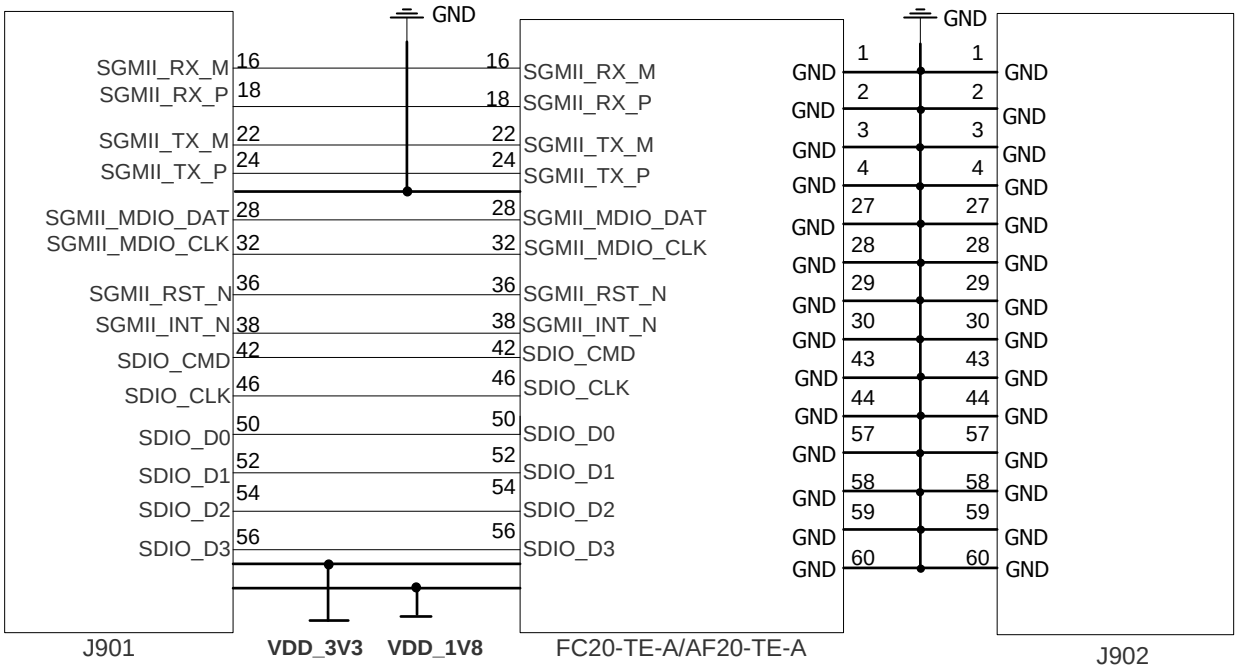

Figure 9: Simplified FC20-TE-A/AF20-TE-A Interface Schematic

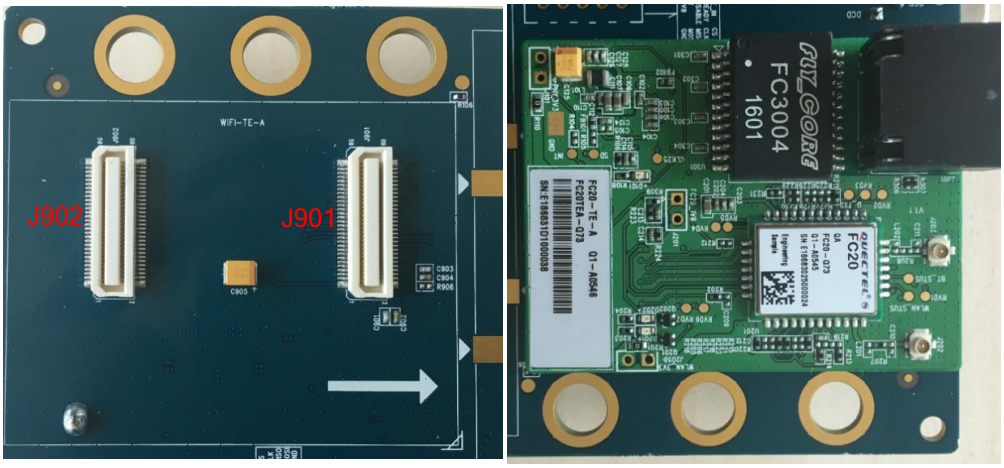

Figure 10: Connection between FC20-TE-A and EVB

4.4. USB Interface (J801)

Quectel UMTS&LTE modules provide a USB interface which complies with USB 2.0 standard and supports high-speed (480Mbps), full-speed (12Mbps) and low-speed (1.5Mbps) modes. The interface is used for AT command communication, data transmission, firmware upgrade and GNSS NEMA output.

The UMTS&LTE EVB provides a Micro-USB interface J801 for connection with a host device. The USB data lines USB_DP and USB_DM are connected directly to the module. The USB_VBUS line can be used for USB connection detection and EVB power supply.

The following figure is a reference circuit design for the USB device interface.

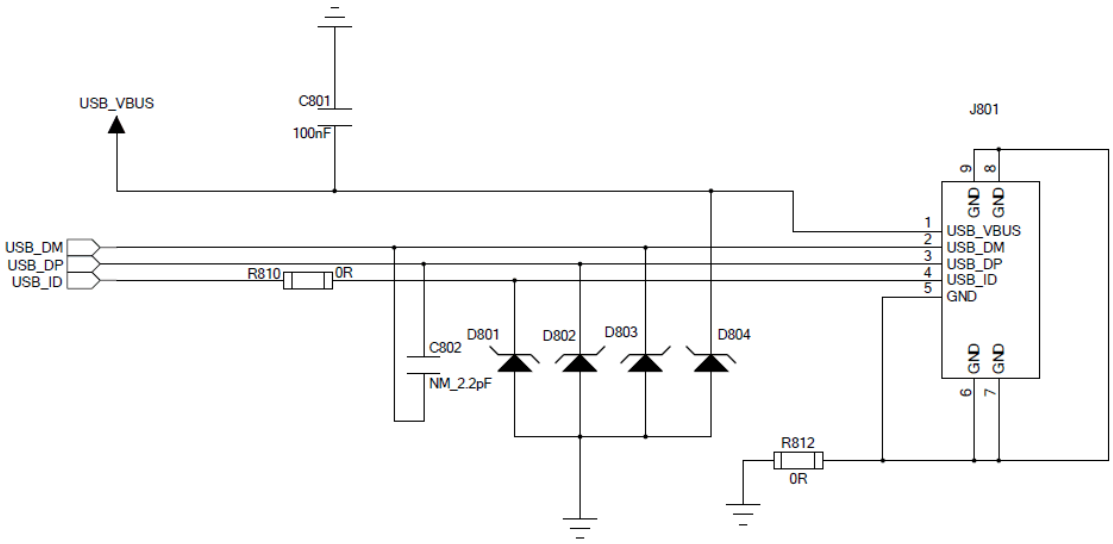

Figure 11: Reference Circuit Design for USB Device Interface

Table 4: Pin Definition of J801

Pin No.	Pin Name	Function
1	USB_VBUS	Used for USB connection detection and EVB power supply
2	USB_DM	USB serial differential bus (minus)
3	USB_DP	USB serial differential bus (positive)
4	USB_ID	USB ID bus for host or device
5	GND	GND for USB interface

4.5. Audio Interfaces

Quectel UMTS&LTE EVB provides one digital audio codec board interface (PCM) J501 and three analog audio interfaces J601, J602 and J603. This chapter gives a detailed introduction on these audio interfaces.

4.5.1. Digital Audio Codec Board Interface (J501)

The UMTS&LTE EVB supports two different kinds of external digital audio codecs named ALC5616 and TLV320AIC3104. The codec circuit is assembled on an independent small board which can be interconnected with EVB by the BTB connector J501.

Customers can select different codecs according to their own application demands, and also can use AT command to switch between codecs. Two examples are provided below. For more details, please refer to ***document [5]*** or ***document [6]***.

- **AT+QDAI=3**: switch codec from TLV320AIC3104 to ALC5616
- **AT+QDAI=5**: switch codec from ALC5616 to TLV320AIC3104

The following figure show a reference design for the connection between digital audio codec boards and the EVB.

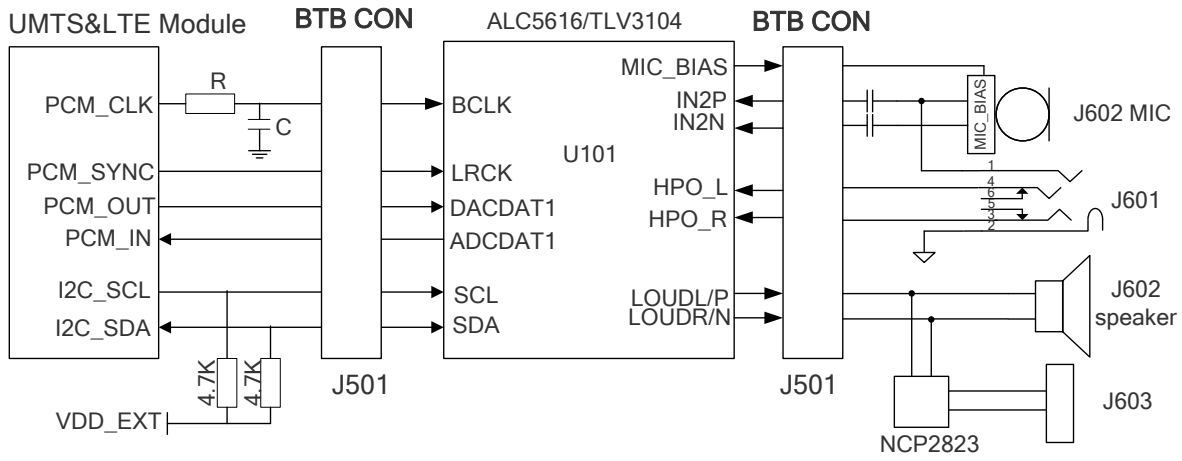

Figure 12: Reference Design for Connection between Codec Board and EVB

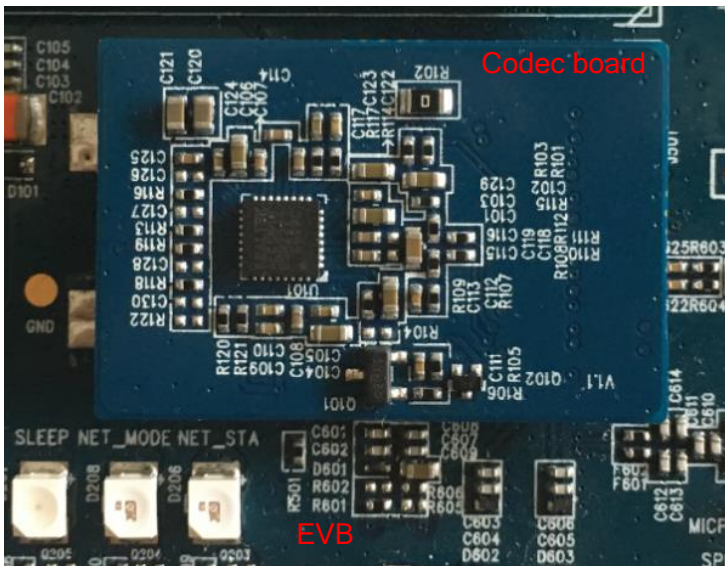

Figure 13: Connection between Codec Board and EVB

4.5.2. Analog Audio Interfaces (J603/J601/J602)

4.5.2.1. Loudspeaker Interface (J603)

Audio interface J603 is designed for loudspeakers and the following figure shows a reference design of loudspeaker with an external Class-D audio amplifier.

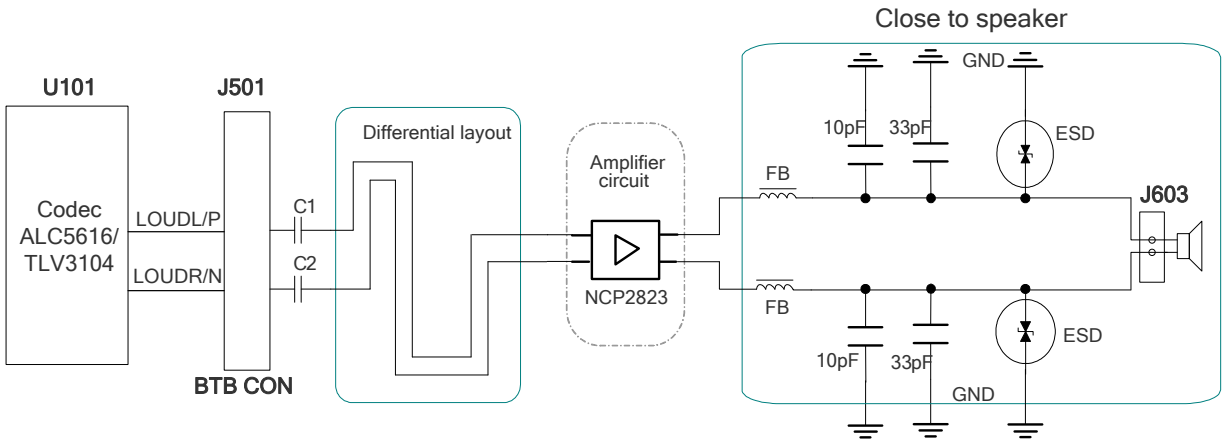

Figure 14: Reference Circuit Design for Loudspeaker Interface J603

4.5.2.2. Earphone Interface (J601)

Audio interface J601 is designed for earphones. A reference circuit design for the interface is shown as following figure.

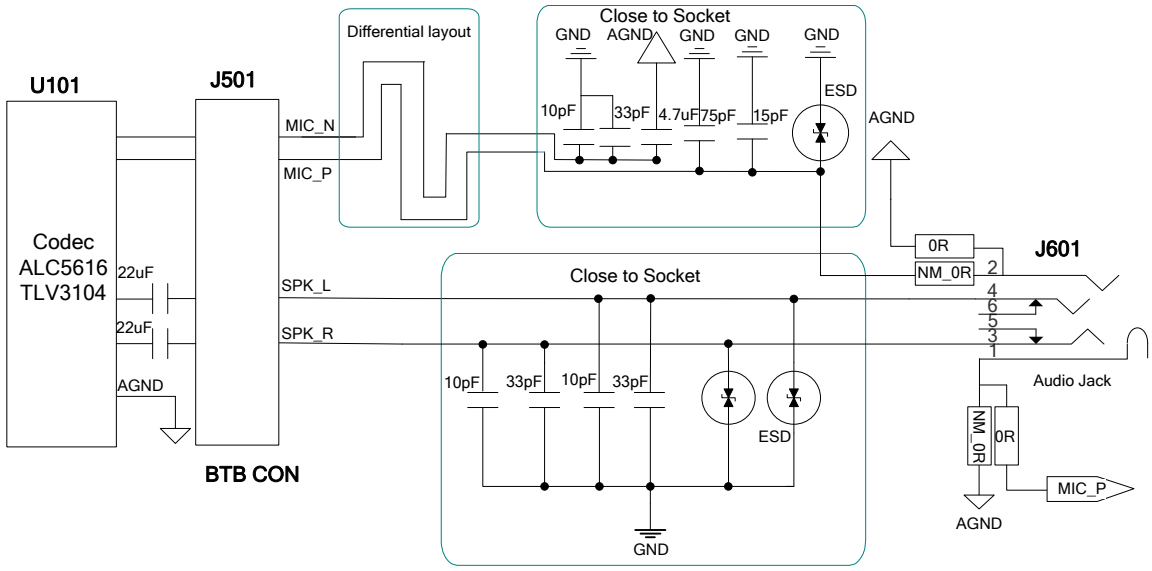

Figure 15: Reference Circuit Design for Earphone Interface J601

The figure and table below illustrate the pin assignment and pin definition of earphone interface J601.

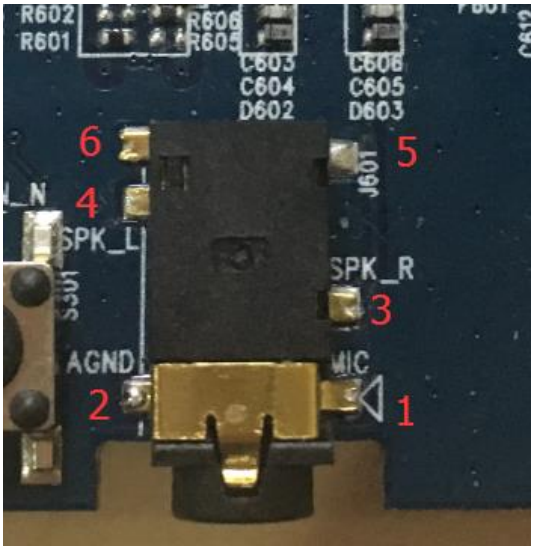

Figure 16: Pin Assignment of J601

Table 5: Pin Definition of J601

Pin No.	Pin Name	Description
1	MIC	Microphone input
2	AGND	Dedicated GND for audio
3	SPK_R	Right channel of stereo audio output
4	SPK_L	Left channel of stereo audio output
5, 6	NC	Not connected

The following figure shows the sketch design of audio plug which suits for the audio jack on UMTS&LTE EVB.

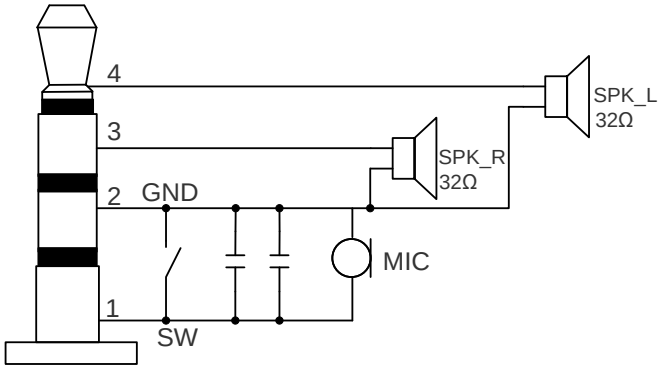

Figure 17: Sketch of Audio Plug

4.5.2.3. Handset Interface (J602)

Audio interface J602 is designed for handsets. A reference circuit design for handset interfaces J602 is shown below.

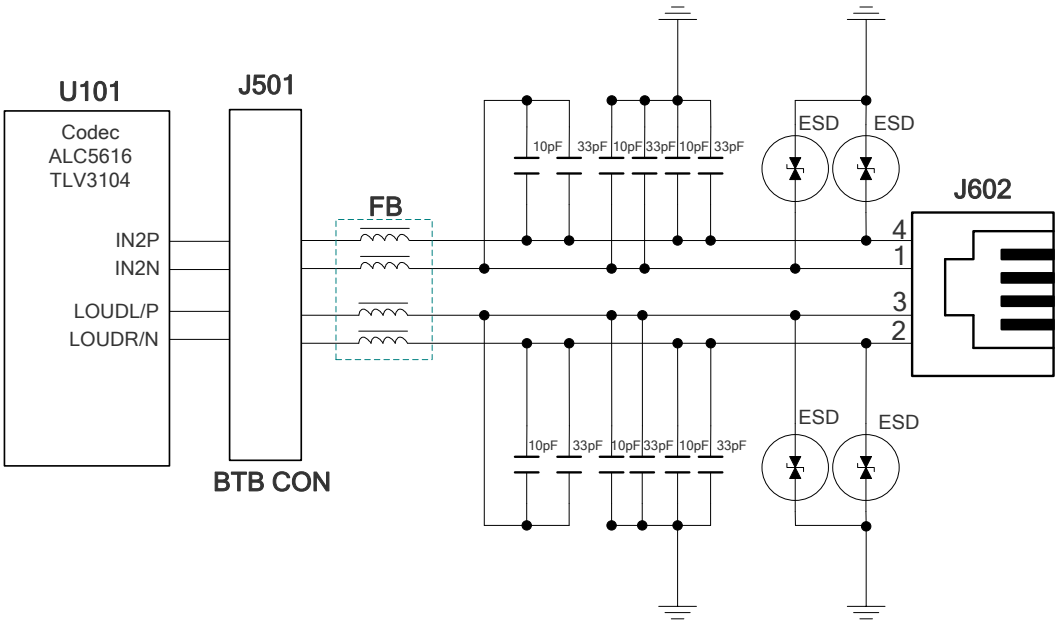

Figure 18: Reference Circuit Design for Handset Interface J602

The figure and table below illustrate the pin assignment and pin definition of handset interface J602.

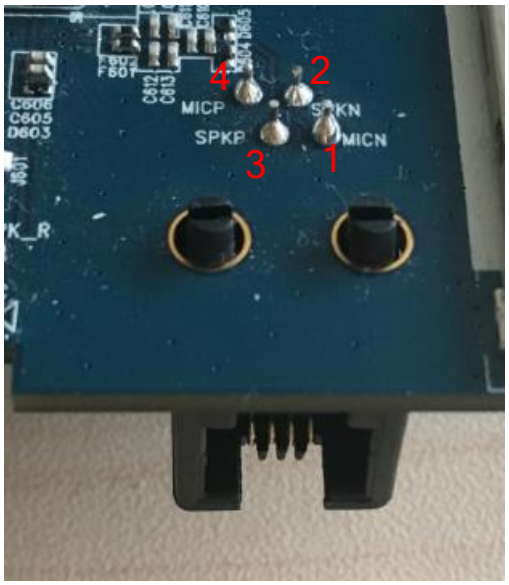

Figure 19: Pin Assignment of J602

Table 6: Pin Definition of J602

Pin No.	Pin Name	Function
1	MICN	Negative microphone input
2	SPKN	Negative loudspeaker output
3	SPKP	Positive loudspeaker output
4	MICP	Positive microphone input

4.6. (U)SIM Interface (J702)

The UMTS&LTE EVB has a 6-pin push-push type (U)SIM card (3V or 1.8V) connector J702. The following figure shows the simplified interface schematic for J702.

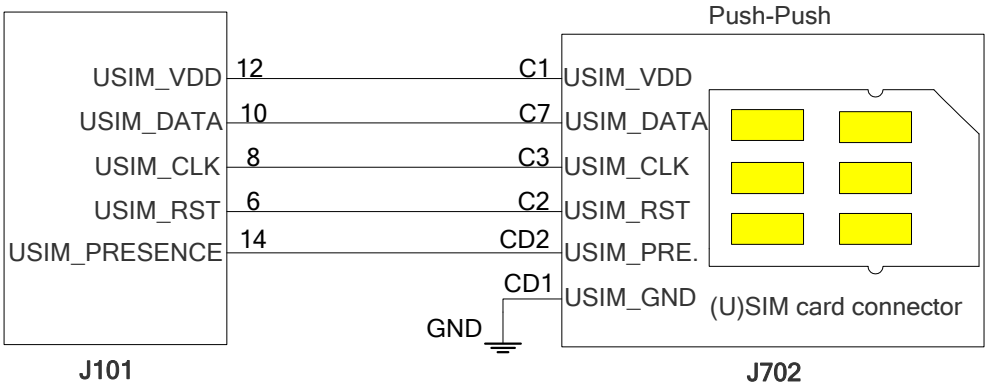

Figure 20: Simplified Interface Schematic for (U)SIM Card Connector J702

The figure and table below illustrate the pin assignment and pin definition of J702.

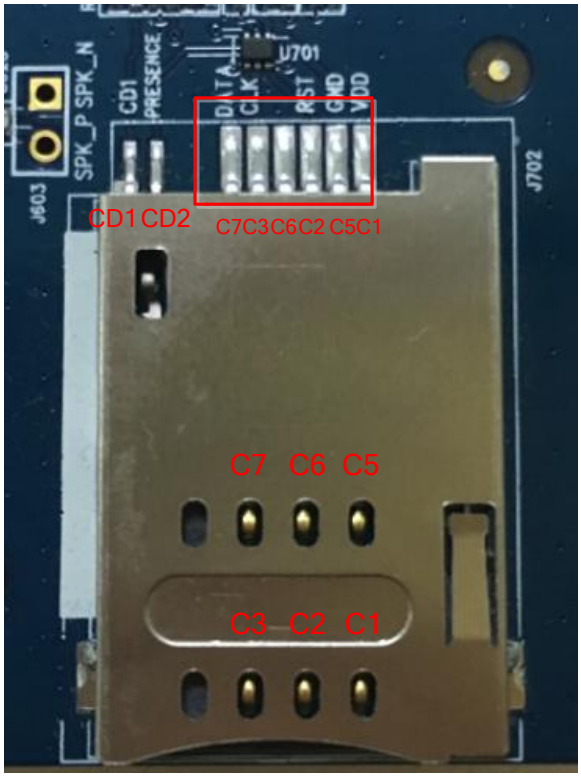

Figure 21: Pin Assignment of J702

Table 7: Pin Definition of J702

Pin No.	Signal Name	I/O	Function
C1	USIM_VDD	PO	U(SIM) card power supply, provided by UMTS&LTE EVB
C2	USIM_RST	DO	U(SIM) card reset
C3	USIM_CLK	DO	U(SIM) card clock
C5	GND	/	Ground
C6	VPP	/	Not connected
C7	USIM_DATA	I/O	Data line, bi-directional
CD1	GND	GND	U(SIM) card insertion detection
CD2	USIM_PRESENCE	I	U(SIM) card insertion detection. Support low level detection.

4.7. SD Card Interface (J701)

The UMTS&LTE EVB provides an SD card interface that supports maximally 32GB micro SD card. With the SD card interface, customers can easily enhance the memory capacity of modules.

The following figure shows the simplified interface schematic for J701.

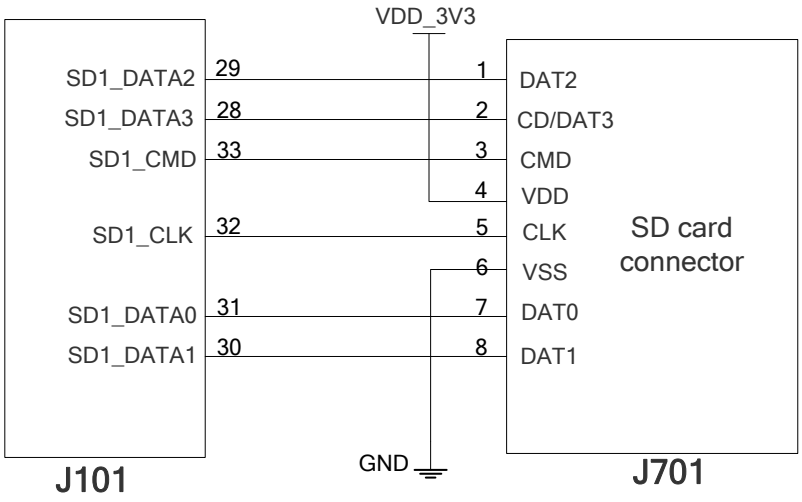

Figure 22: Simplified Interface Schematic for SD Card Interface J701

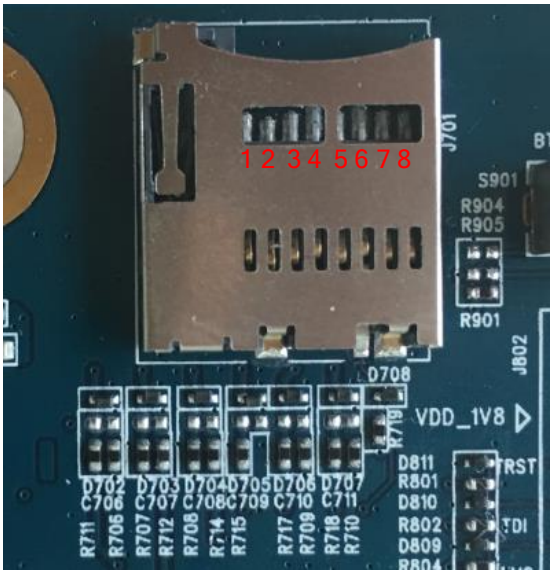

Figure 23: Pin Assignments of J701

4.8. UART Interfaces (J401/J402)

The UMTS&LTE EVB offers two UART interfaces: COM1 (main UART port J401 and J402) and COM2 (debug UART port).

COM1 of UMTS&LTE EVB is intended for communication between the module and the host application. It can be used for data transmission and AT command communication.

COM2 supports 115200bps baud rate by default. It can be used for Linux console and log output.

The following figure shows the block diagram of UART on UMTS&LTE EVB.

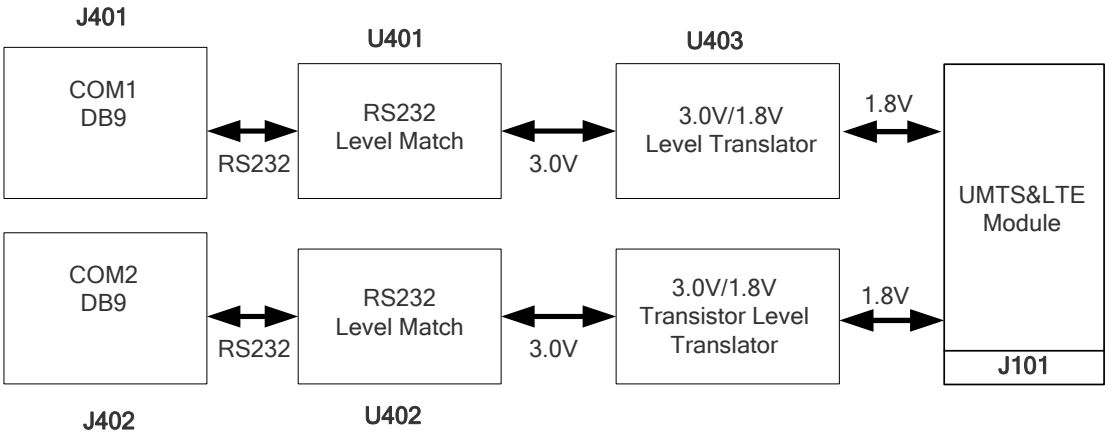

Figure 24: UART Block Diagram

The following figures and tables show the pin assignment and pin definition of J401 and J402.

Figure 25: Pin Assignment of J401

Table 8: Pin Definition of J401

Pin No.	Signal Name	I/O	Description
1	RS232_DCD	DO	Data carrier detection
2	RS232_RXD	DI	Receive data
3	RS232_TXD	DO	Transmit data
4	RS232_DTR	DI	Data terminal ready
5	RS232_GND	/	GND
6	NC	/	Not connected
7	RS232_RTS	DI	Request to send
8	RS232_CTS	DO	Clear to send
9	RS232_RI	DO	Ring indicator

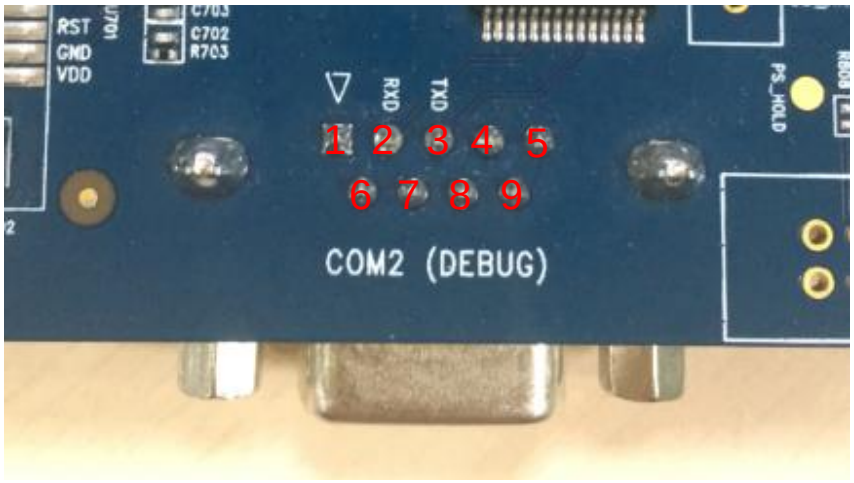

Figure 26: Pin Assignment of J402

Table 9: Pin Definition of J402

Pin No.	Signal Name	I/O	Description
2	RS232_RXD	DI	Receive Data
3	RS232_TXD	DO	Transmit data

4.9. Switches and Buttons

The UMTS&LTE EVB includes two switches (S201 and S901) and three buttons (S301, S302 and S303), as shown in the following figures.

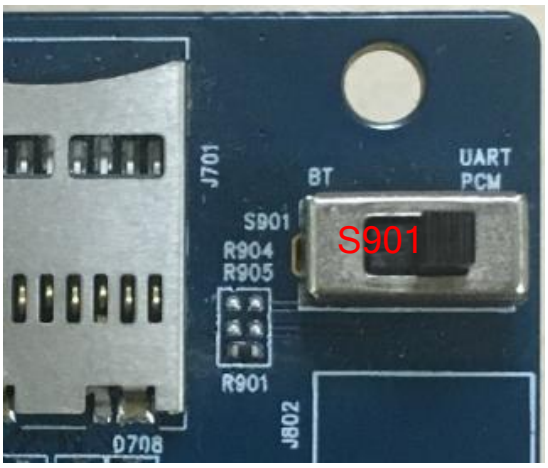

Figure 27: S901 Switch

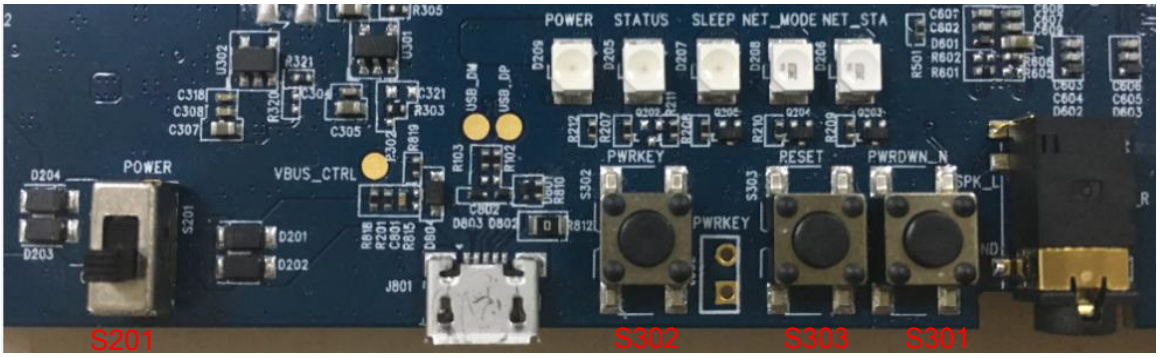

Figure 28: S201 Switch and S301/S302/S303 Buttons

Table 10: Description of Switches and Buttons

Reference No.	Description
S201	VBAT ON/OFF control
S901	Switched to the left: connect BT interface (UART, PCM) of Wi-Fi modules to the PCM interface of EC2x/AG35 modules, for testing the BT function of Wi-Fi modules.

	Switched to the right: connect the main UART and codec board interfaces on EVB to UMTS&LTE module, for testing the module's main UART functions, and the codec's PCM function.
S302	Used to turn on/off UC20/EC2x/EG9x/AG35/BG96 modules, or turn on UGxx modules only
S303	Used to reset UMTS&LTE modules
S301	Used to turn off UGxx modules only

4.10. Status Indication LEDs

The UMTS&LTE EVB comprises five status indication LEDs (D209, D205, D207, D208 and D206). The following figure shows the positions of these LED indicators.

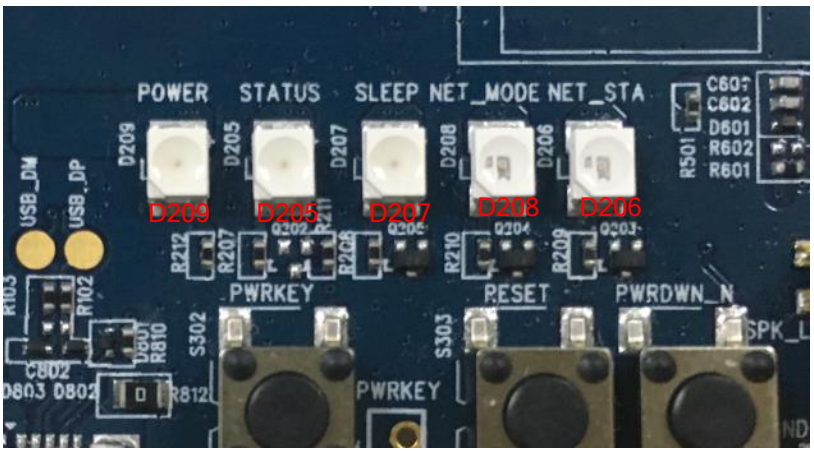

Figure 29: Status Indication LEDs

Table 11: Description of Status Indication LEDs

Reference No.	Description
D209	VBAT ON/OFF indicator. Indicates whether the power supply for UMTS&LTE modules is ready. Bright: VBAT ON Extinct: VBAT OFF
D205	Power ON/OFF indicator. Indicates the operation status of UMTS&LTE modules. Bright: the module is powered on Extinct: the module is powered off
D207	Sleep status indicator. Indicates the sleep status of UMTS&LTE modules.

	Bright: the module is in sleep mode Extinct: the module is not in sleep mode
D208, D206	Network status indicator. Indicates the network status of UMTS&LTE modules. For detailed information please refer to ***document [2]***.

4.11. Test Points

The UMTS&LTE EVB provides a series of test points. They can help customers to obtain the corresponding waveform of some signals. The following two figures show test points J803, J804, J805 and J806.

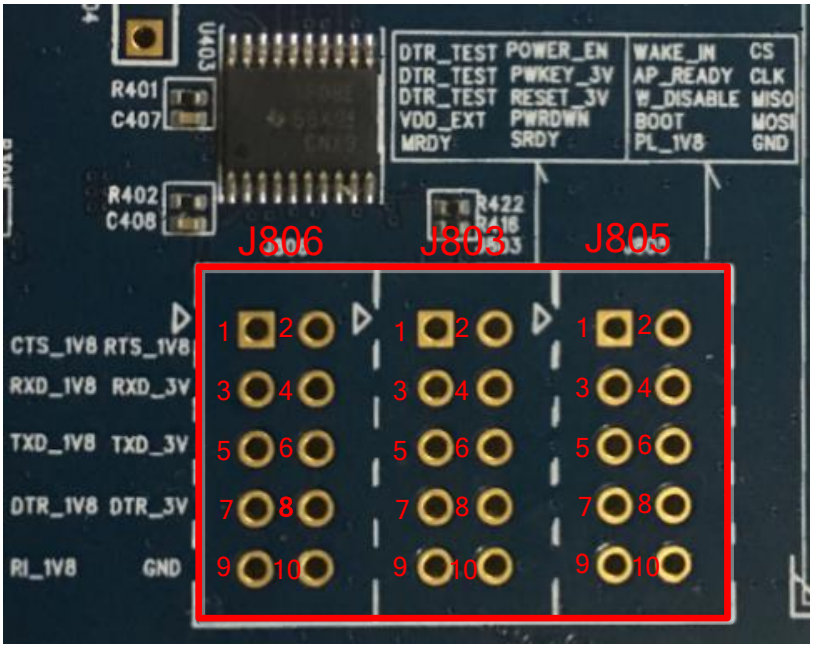

Figure 30: Test Points J803, J805 and J806

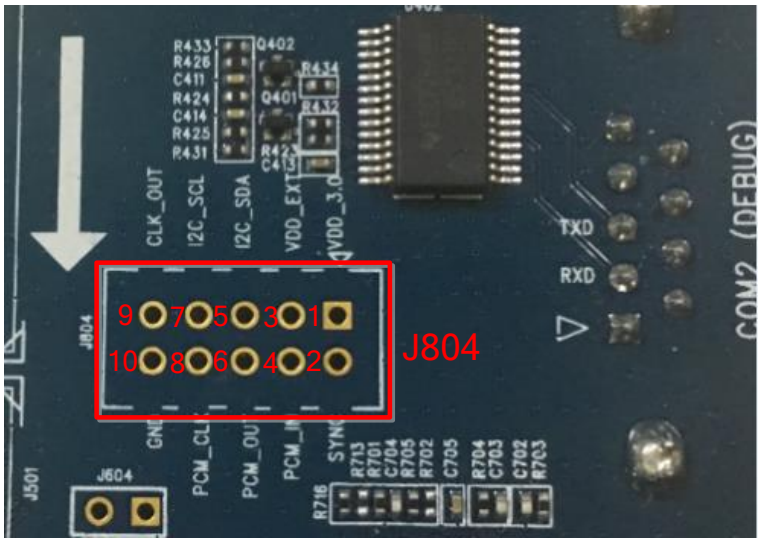

Figure 31: Test Point J804

Table 12: Pin Definition of J803, J804, J805 and J806

J803		
Pin No.	**Pin Name**	**Description**
1, 3, 5	DTR_TEST	Data terminal ready test pins
2	POWER_EN	VBAT enable pin
4	PWRKEY_3.0V	PWRKEY_3.0V test pin
6	RESET_3.0V	RESET_3.0V test pin
7	VDD_EXT	Connected directly to VDD_EXT of UMTS&LTE modules
8	POWER_OFF_3.0V	Used to power off UGxx modules
9	SPI_MRDY	RESERVED
10	SPI_SRDY	RESERVED
J804		
Pin No.	**Pin Name**	**Description**
1	VDD_3.0V	3.0V power supply from U302
2	PCM_SYNC	Connected directly to PCM_SYNC of UMTS&LTE modules

3	VDD_1V8	1.8V power supply from U301
4	PCM_IN	Connected directly to PCM_IN of UMTS&LTE modules
5	I2C_SDA	Connected directly to I2C_SDA of UMTS&LTE modules
6	PCM_OUT	Connected directly to PCM_OUT of UMTS&LTE modules
7	I2C_SCL	Connected directly to I2C_SCL of UMTS&LTE modules
8	PCM_CLK	Connected directly to PCM_CLK of UMTS&LTE modules
9	CLK_OUT	RESERVED
10	GND	Ground
J805		
Pin No.	**Pin Name**	**Description**
1	WAKE_IN	Connected directly to WAKE_IN of UMTS&LTE modules
2	SPI_CS_N	Connected directly to SPI_CS_N of UMTS&LTE modules
3	AP_READY	Connected directly to AP_READY of UMTS&LTE modules
4	SPI_CLK	Connected directly to SPI_CLK of UMTS&LTE modules
5	W_DISABLE_N	Connected directly to W_DISABLE# of UMTS&LTE modules
6	SPI_MISO	Connected directly to SPI_MISO of UMTS&LTE modules
7	USB_BOOT	Connected directly to USB_BOOT of UMTS&LTE modules
8	SPI_MOSI	Connected directly to SPI_MOSI of UMTS&LTE modules
9	VDD_1.8V	Connected to VDD_1.8V via a resistor
10	GND	Ground
J806		
Pin No.	**Pin Name**	**Description**
1	CTS_1.8V_UART	Connected directly to voltage translator
2	RTS_1.8V_UART	Connected directly to voltage translator
3	RXD_1.8V_UART	Connected directly to voltage translator

4	RXD_3.0V	Connected directly to voltage translator
5	TXD_1.8V_UART	Connected directly to voltage translator
6	TXD_3.0	Connected directly to voltage translator
7	DTR_1.8V	Connected directly to DTR of UMTS&LTE modules
8	DTR_3.0V	Connected directly to voltage translator
9	RI_1.8V	Connected directly to RI of UMTS&LTE modules
10	GND	Ground

5 Operation Procedures Illustration

This chapter introduces how to use the UMTS&LTE EVB for testing and evaluation of Quectel UMTS&LTE modules and Wi-Fi modules.

5.1. Power on UMTS&LTE and Wi-Fi Modules

- **Power on UMTS&LTE modules**

1. Connect the UMTS&LTE TE-A to the EVB via connectors J101 and J102.
2. Insert a (U)SIM card into the (U)SIM card connector on EVB, and connect the antennas to UMTS&LTE TE-A.
3. Connect the EVB to a 5V power adapter, or connect the EVB to PC via USB cable.
4. Switch S201 (Power Switch) to **ON** state, then D209 (VBAT ON/OFF indicator) will light up. Press the S302 (PWRKEY) for at least 100ms, then the UMTS&LTE module will be powered on and D205 (power ON/OFF indicator) will light up.

- **Power on Wi-Fi modules**

1. Make sure the EC2x/AG35 module is powered on, if there is a need to test the Wi-Fi function of them.
2. Connect the TE-A of Wi-Fi modules to the EVB via connectors J901 and J902, and then connect the Wi-Fi antenna to the TE-A.
3. Connect the TE-A to PC via an Ethernet cable.
4. Send **AT+QWIFI=1** command to EC2x/AG35 module to enable power supply for Wi-Fi modules. For more details, please refer to ***document [3]*** or ***document [4]***. Before sending the command, please make sure the EVB has been connected to PC via USB cable.

The following table shows the UMTS&LTE modules' network status which are indicated via D206 and D208.

Table 13: Indication of D206 and D208

Status Indication LEDs	State	Network Status
D206 NET_STATUS	Flicker slowly (200ms ON/1800ms OFF)	Network searching
	Flicker slowly (1800ms ON/200ms OFF)	Idle mode
	Flicker slowly (125ms ON/125ms OFF)	Data is being transferred over 2G/3G/4G networks
	Always ON	Voice calling
D208 NET_MODE	Always ON	Registered on 3G network successfully (UC20/UGxx) Registered on 4G network successfully (EC2x/EG95/AG35/BG96)
	Always OFF	Others

5.2. Communication Via USB or UART Interface

5.2.1. Communication via USB Interface

1. Power on the UMTS&LTE module according to the procedures mentioned in ***Chapter 5.1***.

2. Connect the EVB and the PC with USB cable through USB interface, and then run the driver disk on PC to install the USB driver. For details about USB driver installation, please refer to ***document [1]***. The USB port numbers can be viewed through the PC Device Manager, as shown below.

Figure 32: USB Ports

3. Install and then use the QCOM tool provided by Quectel to realize the communication between the UMTS&LTE module and the PC. The following figure shows the COM Port Setting field on QCOM: select correct "**COM port**" (USB AT Port which is shown in above figure) and set correct "**Baudrate**" (such as 115200bps). For more details about QCOM tool usage and configuration, please refer to ***document [7]***.

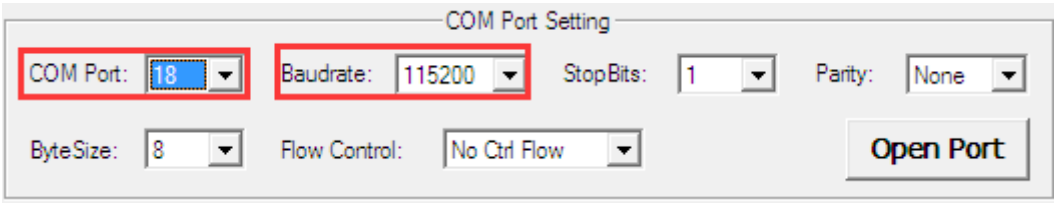

Figure 33: COM Port Setting Field on QCOM (USB AT Port Connection)

5.2.2. Communication via UART Interface

1. Run the driver disk on PC to install the USB-to-RS232 driver.

2. Connect the main UART interface of module to PC with the USB-to-UART converter cable (USB-to-RS232 cable), and the USB serial port number can be viewed through the PC Device Manager, as shown below.

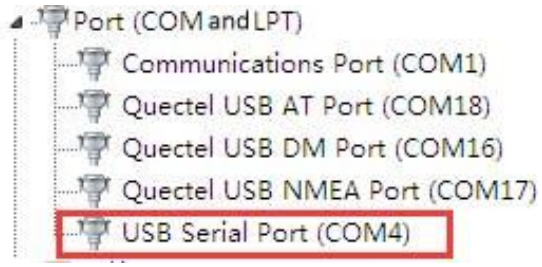

Figure 34: USB Serial Port

3. Install and then use the QCOM tool provided by Quectel to realize the communication between the UMTS&LTE module and the PC. The following figure shows the COM Port Setting field on QCOM: select correct "**COM port**" (USB Serial Port) and set correct "**Baudrate**" (such as 115200bps). For more details about QCOM tool usage and configuration, please refer to ***document [7]***.

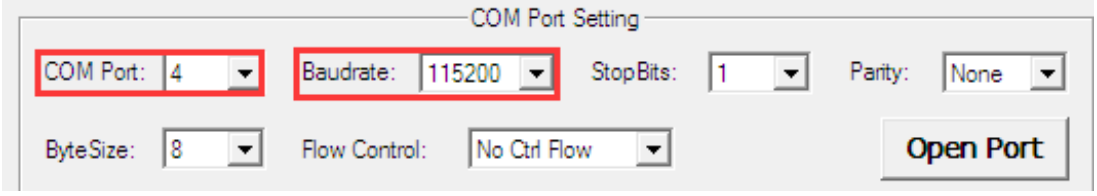

Figure 35: COM Port Setting Field on QCOM (USB Serial Port Connection)

5.3. Firmware Upgrade

Quectel UMTS&LTE modules upgrade firmware via USB port by default, please follow the procedures below to upgrade firmware.

1. Install and open the firmware upgrade tool QFlash on PC and then power on the UMTS&LTE modules according to the procedures mentioned in ***Chapter 5.1***.
2. Click the "**COM Port**" dropdown list and select the USB DM port.
3. Click the "**Load FW Files**" button to choose the firmware package.
4. Click the "**Start**" button to upgrade the firmware.

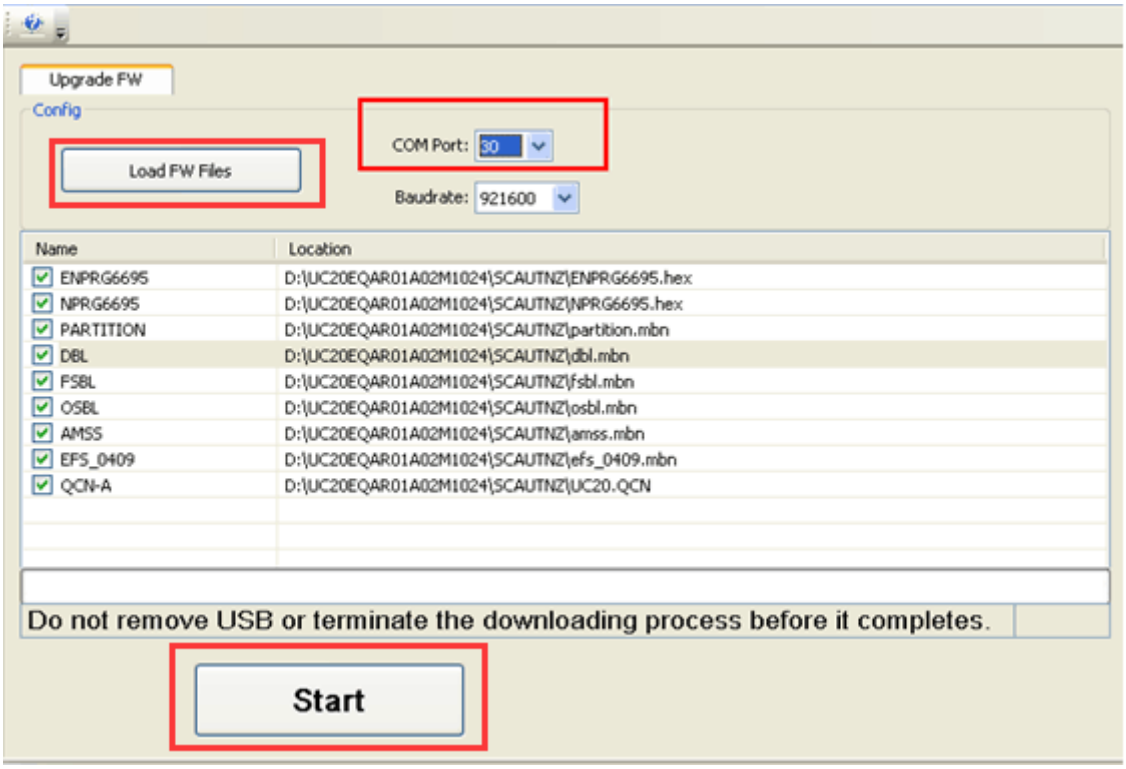

Figure 36: Configurations for Firmware Upgrade

5.4. Reset UMTS&LTE Modules

The emergency reset option is only used in case of emergency. For example, the software does not respond for more than 5s due to some serious problems.

Press the button S303 (RESET) for more than 150ms then release it to reset UMTS&LTE modules. However, this may causes the loss of information stored in the memory as the reset module has been initialized.

5.5. Power off UMTS&LTE and Wi-Fi Modules

- **Power off UMTS&LTE modules**

There are two ways to power off UMTS&LTE modules.

One way is to execute AT command **AT+QPOWD**. This is the best and the safest way. The module will log off from the network and save data before shutdown, but it will be powered on again after shutdown. For more details about the AT command, please refer to ***document [5]*** or ***document [6]***.

The other way to power off the module is to press down S302/S301 button (S302 for UC20/EC2x/EG9x/AG35/BG96 modules, and S301 for UGxx modules) for at least 0.6s.

- **Power off Wi-Fi modules**

AT+QWIFI=0 command can be used to power off Wi-Fi modules. For more details, please refer to ***document [3]*** or ***document [4]***.

6 Appendix A References

Table 14: Related Documents

SN	Document Name	Remark
[1]	Quectel_xx_Windows_USB_Drivers_Installation_Guide	Respective Windows USB drivers installation guide for UC20, UGxx and LTE (EC2x, EG9x, AG35 and BG96) modules
[2]	Quectel_xx_Hardware_Design	Respective hardware design for UC20, UG95, UG96, EC25, EC21, EC20, EC20 R2.0, EC20 R2.1, AG35 and BG96 modules
[3]	Quectel_FC20_Series_Hardware_Design	FC20 series hardware design
[4]	Quectel_AF20_Hardware_Design	AF20 hardware design
[5]	Quectel_WCDMA_UGxx_AT_Commands_Manual	AT commands manual for Quectel WCDMA UGxx modules
[6]	Quectel_xx_AT_Commands_Manual	Respective AT commands manual for UC20, EC25&EC21, EC20, EC20 R2.0, EC20 R2.1, AG35 and BG96 modules
[7]	Quectel_QCOM_User_Guide	User guide for QCOM tool

Table 15: Terms and Abbreviations

Abbreviation	Description
AGND	Analogue Ground
COM	Cluster Communication Port
BTB	Board to Board
DC	Direct Current
DI	Digital Input

DO	Digital Output
EVB	Evaluation Board
GND	Ground
GNSS	Global Navigation Satellite System
I/O	Input/Output
LED	Light Emitting Diode
LTE	Long Term Evolution
MIC	Microphone
NC	Not Connected
PC	Private Computer
PCB	Printed Circuit Board
PCM	Pulse Code Modulation
PO	Power Output
RF	Radio Frequency
SD	Secure Digital
SIM	Subscriber Identity Module
UART	Universal Asynchronous Receiver & Transmitter
UMTS	Universal Mobile Telecommunications System
USB	Universal Serial Bus
USIM	Universal Subscriber Identity Module
VBAT	Voltage of Battery